TIPA Korea Technology and Information Promotion Agency for SMEs

(max 10 pages)

Technology Proposal for 2026 TIPA* International Joint R&D Program

(TIPA: Korea Technology and Information Promotion Agency for SMEs)

The objective of this Technology Proposal is to introduce the institute's proprietary technologies and present potential collaborative areas for Korean SMEs, facilitating joint research and development projects under the 2026 TIPA International Joint R&D Program. This Technology Proposal will be publicly disclosed in conjunction with the official announcement of the 2026 TIPA International Joint R&D Program.

1. Technology Proposer Information

Proposer	Name	Paul Robinson	Email	coria-consortium@purdue.edu
Institute Name	Purdue University			
Address	1203 West State Street, West Lafayette, IN 47907-2057			

2. Technology Overview

Title of Proposed Technology	**Development of a Portable Laser-Induced Breakdown Spectroscopy (LIBS) System for Real-Time Material Identification in Battery Recycling Operations**			
Korea's 12 National Strategic Technology Fields	Semiconductor/Display (), Secondary Battery (√), Advanced Mobility ( ), Next-gen Nuclear Power ( ), Advanced Bio ( ), Aerospace/Marine ( ), Hydrogen ( ), Cybersecurity ( ), AI (√), Next-gen Communication ( ), Advanced Robotics & Manufacturing (√), Quantum ( )			
Industrial Technology Classification [1]	**Technology Field 1** (Large Category)		**Technology Field 2** (Large Category)	
	Mechanical/Materials		*Electrical/Electronics*	
	Medium Category	Small Category	Medium Category	Small Category
	Metal Materials	*Metal Refining/Recovery Technologies*	*Measuring Instruments*	*Optical Measuring Instruments*
Concept of Proposed Technology	**Core Concept** The rapid proliferation of lithium-ion batteries in electric vehicles and consumer electronics has created an urgent need for efficient, scalable recycling infrastructure. A critical bottleneck in current recycling operations is the inability to rapidly and accurately identify battery chemistries at the point of intake, leading to safety hazards, process inefficiencies, and reduced material recovery rates. This project proposes to develop, validate, and demonstrate a portable Laser-Induced Breakdown Spectroscopy (LIBS) device specifically engineered for real-time battery chemistry identification in recycling facilities. **Key Functions and Potential Applications** The proposed system will integrate a compact and stable diode-pumped solid-state laser, spectrometer, argon purge subsystem, and embedded artificial intelligence algorithms to enable			

(max 10 pages)

	instantaneous differentiation of battery chemistries including LFP (lithium iron phosphate), NMC (lithium nickel manganese cobalt oxide), NCA (lithium nickel cobalt aluminum oxide), and LCO (lithium cobalt oxide). Upon successful completion, this technology will enable recycling facilities to achieve sorting accuracies exceeding 98%, reduce thermal runaway incidents by 85%, and increase the economic value of recovered black mass by 25–40% through improved chemistry segregation. 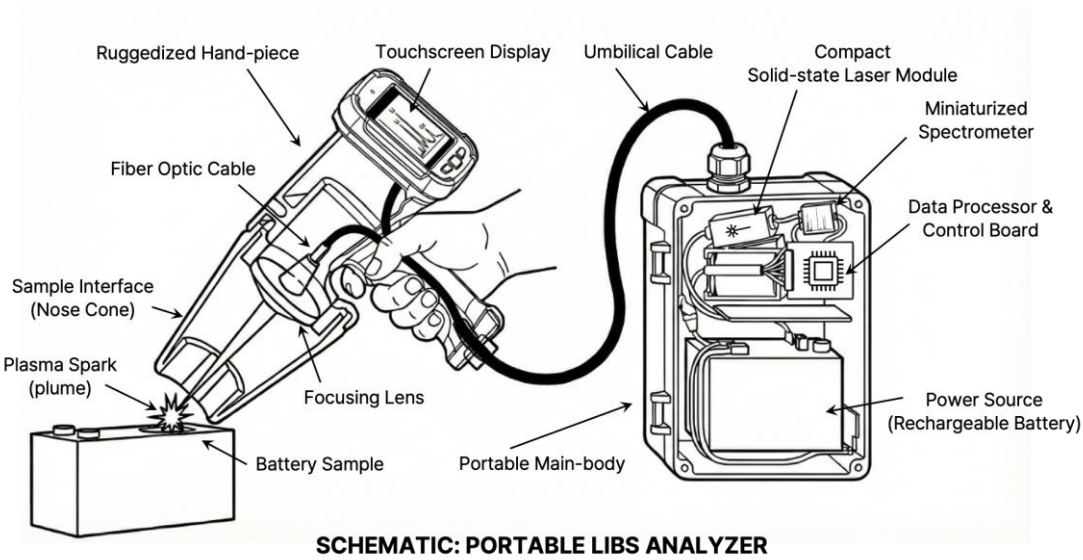 *Figure 1 Proposed portable LIBS system*
Rationale for Joint R&D Project	**Critical Technical Barriers** ● The Critical Need for Battery Recycling The global lithium-ion battery market is projected to exceed 2 terawatt-hours annually by 2030, driven primarily by electric vehicle adoption. This growth creates an unprecedented end-of-life battery management challenge: by 2030, over 11 million metric tons of lithium-ion batteries will reach end-of-life annually. Currently, less than 5% of lithium-ion batteries are recycled globally, with the remainder destined for landfills where they pose fire risks and leach toxic metals into groundwater. Beyond environmental imperatives, battery recycling addresses critical mineral supply chain vulnerabilities. Cobalt, nickel, and lithium extraction from primary ores is geographically concentrated, environmentally destructive, and increasingly expensive. Recovered battery materials can provide 15–30% of projected critical mineral demand by 2040, but only if recycling processes achieve cost parity with virgin material production.

(max 10 pages)

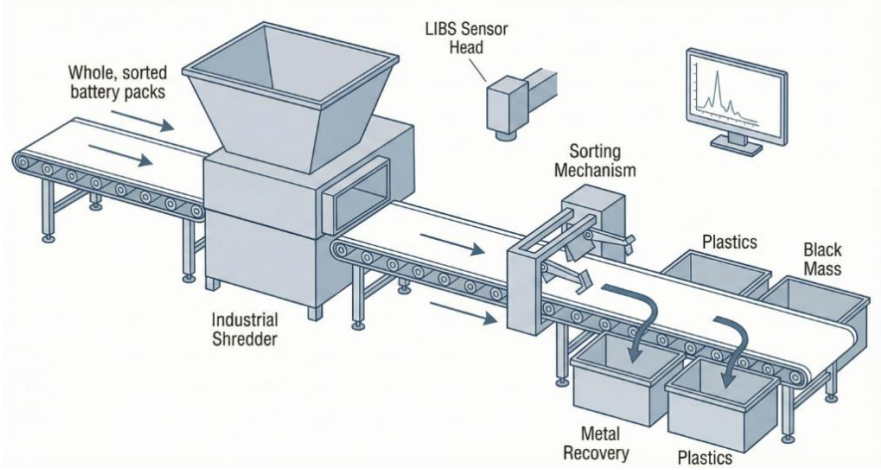

Figure 2 Schematics of a hypothetical industrial LIBS sorting system.

- The Heterogeneity Problem

  The fundamental challenge in battery recycling is the extreme chemical and physical heterogeneity of the feedstock. Recyclers face a black box problem: incoming waste streams contain a chaotic mix of cell form factors (cylindrical, prismatic, pouch) and chemistries (LFP, NMC, NCA, LCO) that are often unlabeled or mislabeled. This uncertainty creates severe consequences:

  - Safety risks: Shredding a charged high-nickel battery can trigger thermal runaway, with temperatures exceeding 800°C and potential for explosive gas release.
  - Process contamination risks: Inadvertent mixing of chemistries, such as introducing iron-rich LFP into a nickel-cobalt refining line, chemically poisons downstream hydrometallurgical processes and can reduce metal recovery yields by 30–50%.
  - Economic penalties: Unsorted or poorly sorted black mass commands 20–40% lower prices from refiners due to processing uncertainty.

- Limitations of Current Sorting Technologies

  Existing sorting methods are inadequate for the scale and complexity of battery recycling:

  - Visual inspection is unreliable because many battery chemistries are housed in identical form factors with minimal distinguishing markings.
  - X-ray Fluorescence (XRF), the industry standard for heavy metal detection, is effectively blind to lithium (atomic number 3) because low-atomic-number elements produce insufficient characteristic X-ray fluorescence signal.
  - Wet chemical analysis is accurate but requires destructive sampling, hazardous reagents, and 30–60 minutes per sample, making it unsuitable for inline sorting.
  - Benchtop LIBS systems demonstrate excellent capability for battery analysis but are immobile, expensive ($150,000–$500,000), and require trained laboratory personnel.

Why Global Collaboration?

- Necessity of a Joint R&D Framework
  - The core technologies required for a portable LIBS system include: 1) a highly stable and compact laser source, 2) optimized optical configuration for field operation, 3) AI-based spectral analysis capable of handling heterogeneous battery materials, and 4) industrial

	integration for real-world recycling environments. ■ Purdue University possesses extensive experience and diverse technical expertise in hand-held and portable LIBS systems, encompassing system architecture, field-deployable measurement techniques, and advanced spectral interpretation. ■ Korean SMEs have accumulated strong capabilities in the development of laser sources and optical systems, as well as extensive hands-on experience in analysis under real industrial conditions. ■ The combination of these complementary strengths forms a strong basis for a joint R&D framework, enabling the integration of advanced LIBS methodologies with industrially viable laser hardware optimized for battery recycling applications.
Key Words	1. Secondary battery 2. Battery recycling 3. Laser induced breakdown spectroscopy 4. Portable device 5. Elemental analysis

3. Research and Development Objectives & Plan

Technology Readiness Level (TRL)[2]	**Start of the Project**	Level (3)	**End of the Project**	Level (7)
R&D Objectives	The overarching goal of this project is to develop a portable, field-deployable LIBS system that addresses the critical gap in battery recycling quality control. We will accomplish this through three integrated aims: ● Aim 1: Design and fabricate a portable LIBS prototype with performance specifications comparable to benchtop systems. We will engineer a portable device consisting of a hand-piece and a main-body that incorporates a DPSS (diode-pumped solid-state) laser (1064 nm, 10–50 mJ/pulse, 10–50 Hz), a dual-range miniaturized Czerny-Turner spectrometer (200–700 nm), an integrated argon purge system, and Class 3B safety interlocks. In particular, a highly stable DPSS laser comparable to benchtop systems will be developed. The hand-piece and the main-body will be connected by an umbilical cable consisting of an optical fiber and a data transmission cable to minimize the weight of the hand-piece and to maintain stable operation of the laser source and the spectrometer. The system will achieve sufficient spectral resolution to resolve lithium emission lines (670.8 nm) from adjacent nickel, manganese, and cobalt signatures. ● Aim 2: Develop and validate machine learning classification algorithms for battery chemistry identification. We will create a comprehensive spectral library encompassing major battery chemistries (LFP, NMC-111, NMC-532, NMC-622, NMC-811, NCA, LCO) and common contaminants. Using this library, we will train and optimize classification algorithms achieving greater than 98% accuracy with classification times under 3 seconds. The algorithms will be			

embedded on the device's onboard processor for standalone operation.

- Aim 3: Validate system performance in operational recycling facility environments.

We will conduct field trials at partner recycling facilities to validate system performance under real-world conditions including variable surface contamination, diverse battery form factors, and typical operational workflows. Success metrics will include sorting accuracy, throughput rate (batteries processed per hour), user acceptance, and reduction in misclassification-related incidents.

R&D Target Specifications

Upon successful completion, this project will deliver:

- A validated portable LIBS system achieving >98% battery chemistry classification accuracy
- Analysis times **under 3 seconds**
- Demonstrated operational performance in industrial recycling environments
- Publications and open spectral databases advancing the broader field of battery analytics

R&D Plan

- Aim 1: Hardware Development
  - Laser Subsystem

Benchtop LIBS systems typically employ high-energy flashlamp-pumped Nd:YAG lasers that are bulky and require water cooling. For portable operation, we will implement a Diode-Pumped Solid-State (DPSS) laser operating at 1064 nm fundamental wavelength. Target specifications include:

- Pulse energy: 10–50 mJ
- Pulse duration: 5–10 ns
- Repetition rate: 10–50 Hz

The trade-off inherent in reduced pulse energy will be compensated by increased repetition rate, allowing accumulation of statistically robust spectral data through signal averaging of 50–100 shots acquired in under 2 seconds.

  - Spectrometer Subsystem

The spectrometer must resolve critical emission lines across a broad spectral range: We will employ a miniaturized Czerny-Turner optical design with a dual-range detector (CCD or CMOS) covering 200–700 nm. Target spectral resolution is 0.1–0.3 nm FWHM, sufficient to resolve closely spaced transition metal lines. The spectrometer will be mounted on a vibration-isolated internal frame to maintain optical alignment under field conditions.

Element	Wavelength(s)
Lithium	670.8 nm
Nickel	340–360 nm
Manganese	403 nm
Cobalt	340–350 nm
Iron	371–385 nm
Phosphorus	253 nm

  - Argon Purge Subsystem

Atmospheric oxygen and nitrogen significantly attenuate emission signals from lighter elements. We will integrate a replaceable argon cartridge system into the device handle, with a micro-valve that releases a brief argon puff onto the sample surface immediately before laser firing. The purge geometry will be optimized through computational fluid

dynamics modeling to achieve localized argon atmosphere at the ablation site while minimizing gas consumption. Target cartridge capacity is 500+ measurements per cartridge.

■ Safety Systems

The device will be classified as Class 3B laser product requiring appropriate safety controls:

- Primary interlock: Proximity sensor on the nose cone that enables laser firing only when the device is pressed flush against a solid surface, preventing accidental exposure.
- Key-switch enable: Prevents unauthorized use.
- Firing indicator LED: Visible to bystanders during operation.
- Automatic shut-off: After 5 minutes of inactivity.

● Aim 2: Algorithm Development

■ Spectral Library Construction

We will construct a comprehensive reference spectral library by analyzing certified battery materials including:

- LFP (multiple manufacturers)
- NMC-111, NMC-532, NMC-622, NMC-811
- NCA
- LCO

For each chemistry type, we will acquire spectra under varying conditions: clean vs. oxidized surfaces, with and without argon purge, multiple laser energies, and multiple accumulation counts. The library will also include common contaminants and interferents: aluminum and copper current collector residues, electrolyte decomposition products, and separator plastic residues.

■ Classification Algorithm Development

Classification algorithms will be developed using a hierarchical approach:

- Primary classification: Element ratio analysis—Li/Fe/P ratios distinguish LFP, while Ni/Mn/Co ratios differentiate NMC variants.
- Secondary classification: Machine learning models (random forest, support vector machine, or neural network architectures) trained on the full spectral fingerprint for improved accuracy and robustness.

We will evaluate algorithm performance using k-fold cross-validation with held-out test sets representing real-world variability. Target performance metrics are >98% classification accuracy and <3 second total analysis time including spectral acquisition.

■ Embedded Implementation

Classification algorithms will be optimized for embedded deployment on ARM-based processors. We will employ model compression techniques (quantization, pruning) as needed to achieve real-time performance within the device's power and computational constraints. The embedded system will also manage user interface, data logging, and wireless connectivity for fleet management and cloud-based model updates.

● Aim 3: Field Validation

■ Operational Workflow Integration

Field validation will occur at partner recycling facilities under realistic operational conditions. The intended operational workflow comprises three phases:

- Phase A: Calibration (Start of Shift)
  1. Warm-up: Power on the device; the laser stabilizes in ~2 minutes.
  2. Argon Check: Verify the argon canister has pressure (if high-precision sorting is required).
  3. Two-Point Calibration: Shoot a known “blank” (pure silica) and a “standard” (e.g., a known NMC cathode sample) to align the spectrometer.
- Phase B: Sorting (The Loop)
  1. Surface Prep: If the battery is covered in thick plastic shrink wrap, the worker peels back a small corner. (Advanced lasers can “burn through” thin paint, but thick plastic absorbs the laser.)
  2. Contact: The worker presses the nose cone of the device firmly against the battery casing or the exposed cell surface.
  3. The “Cleaning Shot”: When the trigger is pulled, the device automatically fires 5–10 “cleaning pulses” first. These are not analyzed; they are used solely to blast away dust, oxide layers, or fingerprint oils.
  4. Data Collection: Immediately after cleaning, the device fires 50+ analysis shots in under 1 second. The spectrometer aggregates the light from all these plasmas.
  5. Algorithmic Matching: The onboard CPU compares the spectral peaks (Li, Co, Mn, Ni) against a pre-loaded library.
  - High Li + High Fe = LFP (Lithium Iron Phosphate)
  - High Li + Ni/Mn/Co = NMC
  - High Pb = Lead Acid (Mistake/Contaminant)
- Phase C: Output & Action
  - The Display: The screen turns GREEN (Process) or RED (Reject/Hazard). It displays the likely chemistry: “NMC 811” or “LFP.”
  - The Action: The worker routes the battery to the corresponding bin.

■ Validation Metrics

Field trials will evaluate the following performance metrics:

- Classification accuracy (compared against destructive ICP-OES analysis of a subset of samples)
- Throughput (batteries analyzed per hour)
- False positive and false negative rates for hazardous material detection
- Device reliability (mean time between failures)
- User acceptance (structured surveys and interviews)
- Impact on facility operations (reduction in misclassification incidents, improvement

	in black mass value)

4. R&R (Roles and Responsibilities)

Expected R&R of Research Institute	Purdue University will play a key role in system design, integration, and advanced data analysis for the portable LIBS system. • Leading system architecture design and structural optimization based on extensive experience in developing handheld and portable spectroscopic and optical instruments • Supporting system integration and device implementation through collaboration with the School of Mechanical Engineering and the Bindley Bioscience Center • Providing technical leadership and core expertise based on extensive publications and patents in LIBS technologies • Participating in integrated system development in collaboration with Korean SMEs' advanced laser technologies • Developing and applying AI-based spectroscopic data analysis and element classification algorithms in close collaboration with other Korean Institute.
Expected R&R of Korean SME Partner	Korean SMEs will take primary responsibility for leading the entire development and commercialization process of the portable LIBS system. • Designing and fabricating prototype integrated LIBS systems based on high-energy, high-stability laser sources • Conducting performance evaluation and validation using secondary battery materials • Securing core intellectual property and establishing patent strategies • Performing market analysis, developing sales strategies, and promoting product commercialization and portfolio expansion

5. Expected Outcomes/Impact

Expected Outcomes and Impact	**Scientific and Technical Impact** This project will advance the scientific understanding of LIBS as an analytical technique for complex, heterogeneous materials characteristic of the circular economy. The spectral library and classification algorithms developed here will constitute a foundational resource for the emerging field of battery analytics. The successful demonstration of portable LIBS with performance approaching benchtop systems will establish new paradigms for field-deployable elemental analysis, with potential applications extending beyond batteries to electronics recycling, mining exploration, and materials quality control.

(max 10 pages)

Economic Impact

The economic impact of improved battery sorting is substantial and quantifiable:

- **Facility-level impact:** Current black mass prices vary by 20–40% depending on certified chemistry and purity. For a medium-scale recycling facility processing 10,000 metric tons of batteries annually, improved sorting accuracy could increase annual revenue by **$2–4 million** through premium pricing for chemistry-verified black mass.
- **Operational savings:** Reduction in thermal runaway incidents reduces insurance costs, facility downtime, and regulatory penalties.
- **Industry-scale impact:** If deployed across projected 2030 recycling capacity, this technology could add **$500 million to $1 billion** in annual value to the battery materials supply chain.

Environmental and Safety Impact

Improved recycling efficiency directly reduces environmental impacts of primary mineral extraction:

- Each ton of recycled cathode material displaces approximately **50 tons of ore extraction**, eliminating associated habitat destruction, water consumption, and carbon emissions.
- From a safety perspective, rapid chemistry identification enables appropriate handling protocols for high-energy cells, reducing worker exposure to thermal runaway events.
- Our target of **85% reduction in thermal incidents** translates to significant improvements in recycling facility safety records and worker confidence.

Strategic Impact on Critical Mineral Supply Chains

Battery materials recovery is increasingly recognized as essential for supply chain resilience:

- Current dependence on geographically concentrated primary production creates vulnerabilities to supply disruptions and price volatility.
- By enabling high-purity material recovery, this technology supports development of domestic recycling capacity and reduces strategic dependence on imported critical minerals.
- The Department of Energy has identified battery recycling as a priority for energy security, and this technology directly addresses identified barriers to scaling recycling infrastructure.

Broader Societal Impact

The transition to electric transportation and renewable energy storage will require massive scaling of battery production and, consequently, end-of-life management. Technologies that enable sustainable, economically viable battery recycling are essential for the environmental credibility of electrification.

This project contributes to that goal by removing a key technological barrier. Beyond the immediate application, the techniques developed here—portable plasma spectroscopy, edge-computing classification, and adaptive measurement protocols—advance capabilities applicable to numerous challenges in materials sustainability and circular economy development.

(max 10 pages)

6. References

1. X. Wu, S. Shin, C. Gondhalekar, V. Patsekin, E. Bae, J. P. Robinson, and B. Rajwa, "Rapid food authentication using a portable laser-induced breakdown spectroscopy system," Foods 12, 402 (2023).
2. S. Shin, I.-J. Doh, K. Okeyo, E. Bae, J. P. Robinson, and B. Rajwa, "Hybrid raman and laser-induced breakdown spectroscopy for food authentication applications," Molecules 28, 6087 (2023).
3. C. Gondhalekar, E. Biela, B. Rajwa, E. Bae, V. Patsekin, J. Sturgis, C. Reynolds, I.-J. Doh, P. Diwakar, and L. Stanker, "Detection of E. coli labeled with metal-conjugated antibodies using lateral-flow assay and laser-induced breakdown spectroscopy," Anal. Bioanal. Chem. 412, 1291–1301 (2020).
4. S. Shin, X. Wu, V. Patsekin, I.-J. Doh, E. Bae, J. P. Robinson, and B. Rajwa, "Analytical approaches for food authentication using LIBS fingerprinting," Spectrochim. Acta Part B At. Spectrosc. 205, 106693 (2023).
5. B. P. Rajwa, E. Bae, J. P. Robinson, C. Gondhalekar, and X. Wu, "Label-free food analysis and molecular detection," (2023).
6. E. Bae, C. Gondhalekar, B. Rajwa, and J. P. Robinson, "Methods, reagents, and substrates for detecting target analytes," (2022).
7. J.-H. Choi, S. Shin, Y. Moon, J. H. Han, E. Hwang, and S. Jeong, “High spatial resolution imaging of melanoma tissue by femtosecond laser-induced breakdown spectroscopy,” Spectrochim. Acta Part B At. Spectrosc. 179, 106090 (2021).
8. G. Jeon, H. Keum, H. Lee, K. Oh, and J. Choi, “Effects of feature engineering on the robustness of laser-induced breakdown spectroscopy for industrial steel classification,” Spectrochim. Acta Part B At. Spectrosc. 212, 106857 (2024).
9. G. Jeon, S. Kim, Y. J. Kim, S. Kim, K. Han, K. Oh, H. J. Lee, and J. Choi, “Identification of fluoroquinolone-resistant Mycobacterium tuberculosis through high-level data fusion of Raman and laser-induced breakdown spectroscopy,” Anal. Methods 16, DOI:10.1039/D4AY01331J (2024).
10. W. Jung, J. Choi, G. Jeon, N. Kim, J. An, I. Jang, S. Jeong, Y.-J. Kim, and H. Keum, “Interface identification in micro-LED repair applications via depth profiling using femtosecond laser-induced breakdown spectroscopy,” Sci. Rep. 15, 40897 (2025).
11. J. Choi and S. Lee, “A System for Analyzing Black Powder Component and Recycling Grade in Waste Batteries with using LIBS and its Operation Control Method,” Korean Patent, filed 2023, registered 2026.
12. J. Choi and Y. Yoo, “LIBS system for real-time foreign substance detection,” Korean Patent, filed 2022, registered 2025.